Support Vector Machine for Fast Fractal Image Compression Base on Structure Similarity

C. M. Kung
Dept. of Information Technology and Communication, Shih Chien University Kaohsiung Campus
Kaohsiung, Taiwan, ROC.
Email: alex@mail.kh.usc.edu.tw
S. T. Chao
Dept. of Engineering and Management of Advanced Technology, Chang-Jung Christian University
Tainan, Taiwan, ROC.
Email: james@cvig.org

Abstract— **Fractal image compression is promising both theoretically and practically. The encoding speed of the traditional full search method is a key factor rendering the fractal image compression unsuitable for real-time application. The primary objective of this paper is to investigate the comprehensive coverage of the principles and techniques of fractal image compression, and describes the implementation of a pre-processing strategy that can reduce the full searching domain blocks by training the Support Vector Machine which could recognized the self-similar pattern feature to enhance the domain block searching efficiency. In this paper, the novel image quality index (Structure Similarity, SSIM) and block property classifier based on SVM employed for the fractal image compression is investigated. Experimental results show that the scheme speeds up the encoder 15 times faster and the visual effect is better in comparison to the full search method.**

Index Terms— **Fractal Image Coding, Structure Similarity, SSIM, SVM.**

I. Introduction

Fractal image compression is time consuming in the encoding process. The time is essentially spent on the search for the best-match block in a large domain pool. In this research, the novel image index is utilized to reduce the compute complexity. With this technique, the visual effect is better than that of the full search method while the quality of the retrieved image is almost the same. Fractal image compression was original proposed by Barnsley [1] [2] [3] and first realized by Jacquin in 1990 [4]. The fundamental hypothesis of the fractal image compression is based on the Partitioned Iteration Function System (PIFS) which employs the self-similarity property of the image to achieve the objective of image compression. In order to encode an image according to the self-similarity property, the most similar domain block in a large domain pool of each block has to be found. For the baseline method, the encoding process is time consuming since a large amount of computations of similarity measurement are required to find the best match.

This work was supported by National Science Council of Taiwan grants NSC 97-2218-E158-001, NSC 97-2815-C-158-002-E.

Meanwhile, in order to achieve the global optimization, global offsets have to be recorded, which increase the storage spaces. Therefore, focal aims of fractal image compression are to speed up the encoding speed and to increase the compression ratio.

In 1994, the Y. Fisher's classification method [5], a given image block was divided into the four quadrants. For each quadrant, the average and the variance were computed. According to certain combination of these values, 72 classes were constructed. This method reduced the searching space efficiently. However, it required large amount of computations and moreover, the arrangement of these 72 classes was complicated. In 2000, Z. Wang, D. Zhang, and Y. Yu [6], four types of range block was defined base on the edge of the decoded image. They used a hybrid type of coding mechanism to achieve higher compression ratio while maintaining a reasonable image quality. Their method does provide speedup ratio of 1.6 to 5 times, however, it still requires the same amount of storage space as that of the baseline method. Truong et al. [7] [8] proposed Discrete Cosine Transform (DCT) inter product based algorithm which removes all of the redundant calculations to achieve a faster encoding process. In 2004, Wang [9] proposed the structural similarity (SSIM) index is a novel method for measuring the similarity between two images. The SSIM index can be viewed as a quality measure of one of the images being compared, provided the other image is regarded as of perfect quality. The authors [10] proposed the high performance motion estimation use the edge-type of image blocks for motion detection and proposed fractal image compress using visual-based structure similarity index [11] in 2008.

Statistical learning techniques based on risk minimization such as Support Vector Machine (SVM) are discovered to be powerful classification schemes. In the SVM research literatures, the SVM performance is better than the ANN in classification and regression problems [12], [13], [14]. Compared with ANN, SVM has several advantages:

1) SVM is an implementation of Structural Risk Minimization (SRM) [15] techniques which minimize the generalization error, that is, true error on unseen

doi:10.4304/jsw.5.7.777-784

examples.

2) SVM can find a unique hyperplane that maximizes the margin of separation between the classes among all hyperplanes separating the data.
3) SVM can map the input data from the low-dimension into the high-dimension feature spaces using a kernel function and construct a linear binary classifier.
4) SVM can easily control the over-fitting problem by choosing suitable margins (that is, support vectors).

This paper explores the application of the Support Vector Machine (SVM) for feature classification and demonstrates. These machines were developed for nonlinear classifications and function estimation [16].

II. Support Vector Machine System

The SVM [12], [13], [14] is a powerful software based methodology for solving spatial problems in nonlinear classification and function estimation. The SVM is a new learning machine developed by V. Vapnik [15]. The basic SVM deals with two-class problems in which the data are separated by a hyperplane defined by a number of support vectors. It is derived from the idea of creating an optimal hyperplane providing a maximum margin between the nearest elements of the two classes to the hyperplane. These elements, or points, that define the hyperplane, are referred to as support vectors. In the SVM, the input vectors are mapped by a linear or nonlinear transformation to a very high-dimensional feature space. A linear discriminant function is then constructed in the feature space on the basis of the support vectors, which is nonlinear from the perspective of the input vector space.

A. Learning in Feature Space

The complexity of the target function to be learned depends on the way it is represented, and the difficulty of the learning task can vary accordingly. Ideally a representation that matches the specific learning problem should be chosen. So one common preprocessing strategy in machine learning involves changing the representation of the data:

$$x = (x_1, ...x_n) \Longrightarrow \Phi(x) = (\phi_1(x), ..., \phi_N(x)) \quad (1)$$

where n and N are the dimensions of input vector space and feature space. The step is equivalent to mapping the input vector space X into a feature space, namely $F = \{\Phi(x)|x \in X\}$.

B. The Implicit Mapping into Feature Space

In order to learn non-linear relations with a linear machine, one needs to select a set of non-linear features and rewrite the data in the new representation. Suppose a non-trivial training set is given as

$$S = \{(x_1, y_1), ..., (x_i, y_i)\} \quad (2)$$

where $x_i \subseteq \Re^n, y_i \in \{1, -1\}$, for $1 \leq i \leq l$, X_i is the input vector and y_i is the corresponding output of training set, $1 \leq i \leq l$, and l is the training set size. This is equivalent to applying a fixed non-linear mapping of the data to a feature space in which the linear machine can be used. Hence, the set of hypotheses we consider will be functions of the type

$$f(x) = \sum_{i=1}^{N} w_i \phi_i(x) + b \quad (3)$$

where $\Phi : X \rightarrow F$ is a non-linear map from the input vector space to some feature space, w_i is the entry of weight vector w and b is the bias. Eq.(3) means that one will build non-linear machines in two steps:

1) Fixed non-linear mapping transforms the data from input vector space X into a feature space F.
2) Used the linear machine to classify the data in the feature space.

The hypothesis can be expressed as a linear combination of the training points in a dual representation so that the decision rule can be evaluated using just inner products between the test point and the training points:

$$f(x) = \sum_{i=1}^{l} \alpha_i y_i < \Phi(x_i) \cdot \Phi(x) > + b \quad (4)$$

where α_i is the dual variables. The kernel function K is defined to compute the inner product $< \Phi(x_i) \cdot \Phi(x) >$ in feature space directly as a function of the input vectors.
Definition: A kernel is a function K, such that for all $x, z \in X$

$$K(x, z) =< \Phi(x) \cdot \Phi(z) > \quad (5)$$

where Φ is a mapping from X to an feature space F. The kernel function merges the two steps needed to build a non-linear learning machine. Eq.(4) can be evaluated by at most evaluations of the kernel; that is,

$$f(x) = \sum_{i=1}^{l} \alpha_i y_i K(x_i, x) + b \quad (6)$$

The Gaussian kernel is used and is defined as

$$K(x, x_j) = exp(-\frac{||x - x_j||^2}{2\sigma^2}) \quad (7)$$

where the parameter σ is one parameter of Gaussian function, which is a tradeoff between the number of support vectors and generalization quality. The SVM can be trained to construct a hyperplane for which the margin of separation is maximized. This hyperplane can be represented using the method of Lagrange multiplies as follows: Given the training set in (2), consider the construction of the maximal margin classifier in which the training set S is linearly separable in the feature space. Using the feature space of S implicitly defined by the kernel function K, the quadratic optimization problem is defined by
maximize

$$W(\alpha) = \sum_{i=1}^{l} \alpha_i - \frac{1}{2} \sum_{i=1}^{l} \sum_{j=1}^{l} \alpha_i \alpha_j y_i y_j K(x_i, x_j)$$

subject to $\sum_{i=1}^{l} \alpha_i y_i = 0$ and $0 \le \alpha_i \le C$, $i = 1, \ldots, l$ where $\alpha = \{\alpha_1, \alpha_2 \ldots, \alpha_l\}$ is the set of Lagrange multipliers and C is the upper bounds of box constraint [16]. A α can be found to be the maximum value of $W(\alpha)$ under the condition of $\sum_{i=1}^{l} \alpha_i y_i = 0$ and $0 \le \alpha \le C$, $i = 1, 2, \ldots, l$. This α which maximize value of $W(\alpha)$ denotes α^*. Define $I_{sv} = \{i | \alpha_i^* > 0, 1 \le i \le l\}$. Then one obtains weight vector w^* as

$$w^* = \sum_{i=1}^{l} \alpha_i^* y_i \Phi(x_i) = \sum_{i \in I_{sv}} \alpha_i^* y_i \Phi(x_i) \tag{8}$$

Choose any $\alpha_k^* > 0$, then

$$b^* = y_k - \sum_{i \in i_{sv}} \alpha_i^* y_i K(x_i, x_k) \tag{9}$$

The optimal discriminant function is thus given by

$$f^*(x) = \sum_{i \in i_{sv}} \alpha_i^* y_i K(x_i, x_k) + b^* \tag{10}$$

From the Karush-Kuhn-Tuker (KKT) condition [16], for the training examples that lie within the decision boundary only, the corresponding multipliers are nonzero. Only these examples called support vectors which affect the construction of the hyperplane can be observed. With the early discussion of SVM theory, the possibility of SVM in training the non-trivial training set S into the optimal discriminated equation $f^*(x)$ can be obtained. This equation $f^*(x)$ will be able to classify the untrained data. This technique can be utilized to make appropriate decisions in the inspection module in the automated inspection quality management system.

III. Image Quality Assessment

Image Quality Assessment in Image Processing plays an important role, as image processing algorithms and systems design benchmarks to help assess the best or the quality of the results. At present more commonly used by the image quality index for the assessment of Mean Square Error (MSE) and the Peak Signal to Noise Ratio (PSNR), respectively, are defined as follows:

$$MSE = \frac{1}{N} \sum_{i=1}^{N} (x_i - y_i)^2 \tag{11}$$

$$PSNR = 10 \times log \frac{255^2}{MSE} \tag{12}$$

where N is the size of image, x_i and y_i are the gray level of pixel of original image and test image.

However, these common approach, focused on the image gray value of the mathematical model to quantify the numerical standards, although with an objective assessment, but not all of the assessment results can meet the human visual judgement. By Figure 1 can be found in the Test Signal 1, Test Signal 2 and Original Signal Error Signal of the MSE results are the same, but the human visual judgement can be found Test Signal 1 is closer to Original Signal.

The structural similarity (SSIM) index is a novel method for measuring the similarity between two images

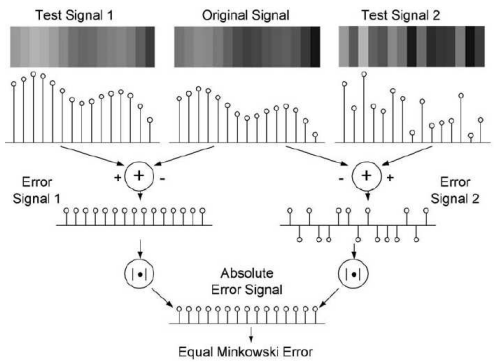

Figure 1. MSE distortion of the signal different calculation

[11]. The SSIM index can be viewed as a quality measure of one of the images being compared, provided the other image is regarded as of perfect quality. The SSIM index is a full reference metric, in other words, the measuring of image quality based on an initial uncompressed or distortion-free image as reference. SSIM is designed to improve on traditional methods like PSNR and MSE, which have proved to be inconsistent with human visual system. SSIM is also commonly used as a method of testing the quality of various lossy video compression methods.

Using SSIM index, image and video can be effectively compared. The system diagram of the proposed quality assessment system is shown in Figure 2.

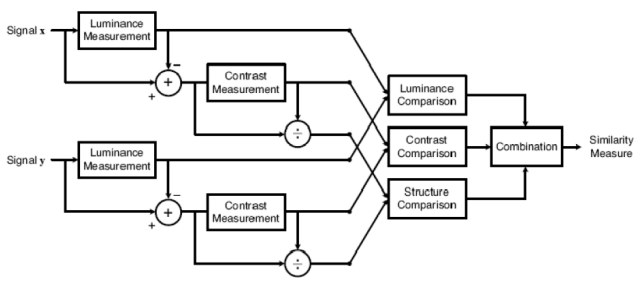

Figure 2. Structural Similarity (SSIM) Measurement System

SSIM comprehensive structural similarity of the indicators that the overall quality of the images, including images of the luminance, contrast and structure, SSIM is defined as:

$$SSIM(x, y) = l(x, y)^{\alpha} \times c(x, y)^{\beta} \times s(x, y)^{\gamma} \tag{13}$$

$$l(x, y) = \frac{2\mu_x \mu_y + C_1}{\mu_x^2 \mu_y^2 + C_1} \tag{14}$$

where $\mu_x = \frac{1}{N} \sum x_i$, $\sigma_x = \left(\frac{1}{N-1} \sum (x_i - \mu_x)^2\right)^{\frac{1}{2}}$

$$c(x, y) = \frac{2\sigma_x \sigma_y + C_2}{\sigma_x^2 \sigma_y^2 + C_2} \tag{15}$$

where $\mu_y = \frac{1}{N} \sum y_i$, $\sigma_y = \left(\frac{1}{N-1} \sum (y_i - \mu_y)^2\right)^{\frac{1}{2}}$

$$s(x, y) = \frac{\sigma_{xy} + C_3}{\sigma_x \sigma_y + C_3} \tag{16}$$

where $\sigma_{xy} = \frac{1}{N-1} \sum (x_i - \mu_x)(y_i - \mu_y)$

The SSIM index is a decimal value between 0 and 1. A value of 0 would mean zero correlation with the original image, and 1 means the exact same image.

Wang in 2002 first proposed a new image quality assessment indicators. Wang simplify the SSIM by Universal Quality Index (UQI) [17]. UQI is defined as follows:

$$UQI(x, y) = l(x, y) \times c(x, y) \times s(x, y) \tag{17}$$

where $C_3 = C_2/2, C_1 = C_2 = 0$, and to simplify as follows:

$$UQI(x, y) = \frac{(2\mu_x\mu_y)(2\sigma_{xy})}{(\mu_x^2 + \mu_y^2)(\sigma_x^2 + \sigma_y^2)} \tag{18}$$

IV. Edge-type Classifier Design

The edge property is specified through an edge-type classifier. The classifier partitions image blocks into four classes which are smooth class, horizontal edge class, vertical edge class, and diagonal edge class. In terms of fractal similarity, the underlying idea of such a classifier is that blocks tend to be similar to blocks of the same type. The classifier is implemented through two DCT coefficients which represent the strength of the horizontal and vertical energy in the block. Let f be a given image block of size $L \times L$. The DCT of f, denoted by F, is computed from the formula of DCT. Assume $L = 8$, we can compute V and H as

$$V = |F(1, 0)| = \frac{\sqrt{2}}{8} | \sum_{y=0}^{7} \sum_{x=0}^{7} f(x, y) cos \frac{(2x + 1)\pi}{16} | \tag{19}$$

$$H = |F(0, 1)| = \frac{\sqrt{2}}{8} | \sum_{y=0}^{7} \sum_{x=0}^{7} f(x, y) cos \frac{(2y + 1)\pi}{16} | \tag{20}$$

The term V measures energy variation between the left half and the right half of f. Therefore, if f has strong vertical edges, V will be significant. Similarly, H reflects the strength of horizontal edges. The classification is performed according to the magnitudes of V and H. Let T_h be the threshold to determine the smooth class and T_d be the threshold to determine the diagonal class. The block diagram of the DCT-based classifier is given in Figure 3. The input is an image block f and output is the class index.

V. Full Search Fractal Image Compression

Fractals are mathematical sets that exhibit self-similarity under all scales of magnification. In fractal image coding an arbitrary image is encoded into a set of equations. These equations are usually affine transformations that transform a sub-image, called a domain block u, into another sub-image, called a range block v. In addition, to be calculated MSE given range block v, to find a domain block u, p and q to make $d = \|p \cdot u + q - v\|$ minimum, p and q is define as follows:

$$p = \frac{N \times \sum_{i=0}^{N-1} u_i v_i - \sum_{i=0}^{N-1} u_i \sum_{i=0}^{N-1} v_i}{N \times \sum_{i=0}^{N-1} u_i^2 - \left(\sum_{i=0}^{N-1} u_i\right)^2} \tag{21}$$

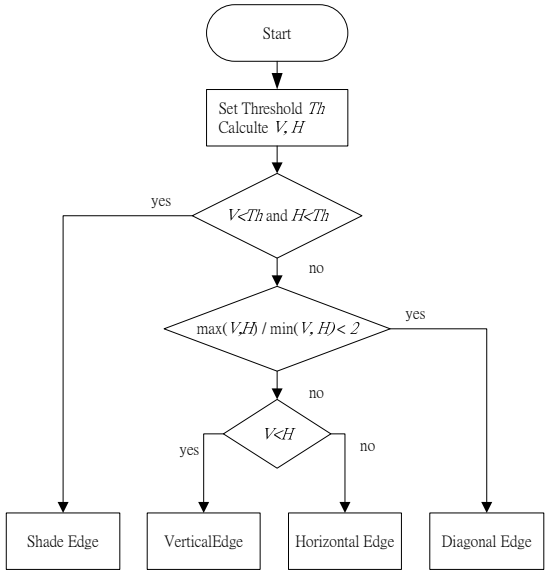

Figure 3. The Workflow of Edge Oriented Classification

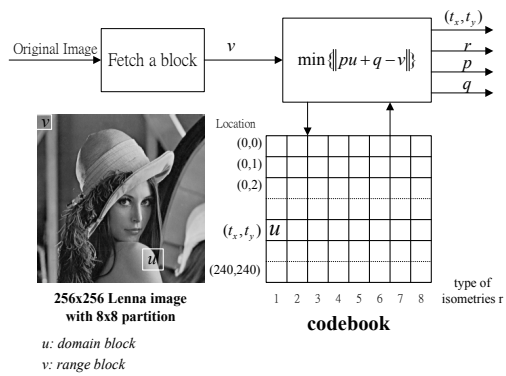

Figure 4. Fractal Image Encoding

$$q = \frac{1}{N} \left[\sum_{i=0}^{N-1} v_i - p \sum_{i=0}^{N-1} u_i \right] \tag{22}$$

An image is divided into non-overlapping range blocks, and a search for a best matching domain block is performed for each range block. Domain blocks are usually larger than range blocks, and are similar to one another under that affine transformation. The fractal image coding diagram is show as Figure 4. and Figure 5.

The flowchart of fractal image encode algorithm are show as Figure 6. Full search fractal image compression used the MSE (mean-squared error) to assess the similarity between the domain block and range block, in every range block, from the domain pool, was the most similar to the domain block. You need $58081 \times 8 = 464648$ MSE calculations. Therefore, the compression method used Baseline encoded images, will require a total of $1024 \times 464648 = 475799522$ MSE the huge amount of computation. In addition, calculation of p, q values will increase the complexity of computing increasing compute complexity.

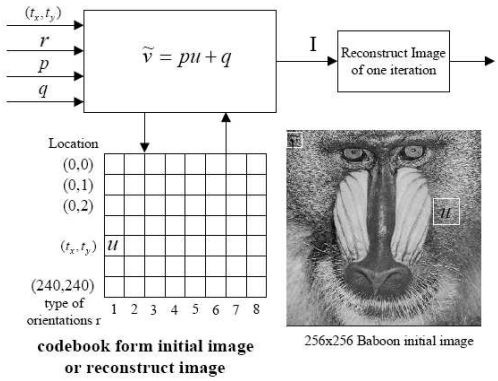

Figure 5. Fractal Image Decoding

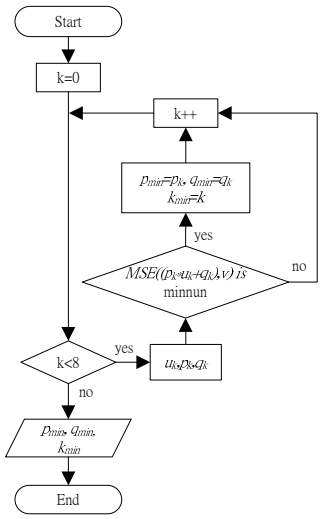

Figure 6. Fractal Image Encoding with MSE

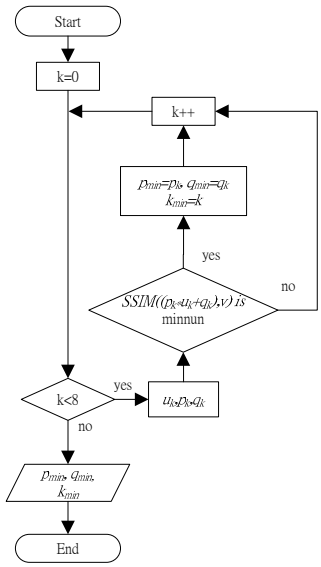

Figure 7. Fractal Image Encoding with SSIM

Therefore, the SSIM index has replaced the MSE to assessment range block and the similarity between the domain block. Because of similar level indicators are designed with human visual system and Suitable for measuring the visual structure of information. Because the conduct SSIM estimate, already contains luminance, contract of images.

The coding system demonstrates good coding performance and visual effect in fractal image compression as Table I. As an illustrative example, Table I. demonstrates

TABLE I.
RETRIEVED IMAGE UNDER DIFFERENT IMAGE QUALITY ASSESSMENT

Lena	Full Search with MSE	Full Search with SSIM
PSNR	28.91	28.93
SSIM	0.984	0.984
Criteria	MSE	SSIM
Speed Up	1	0.85

the results of the proposed approach in comparison to the baseline method. Figure 8(a). demonstrate the close-up of retrieved Lena images using the baseline method with MSE index and Figure 8(b). demonstrate the close-up of retrieved Lena images using the baseline method with SSIM. We can find the visual effect of Figure 8(b). is better than Figure 8(a).

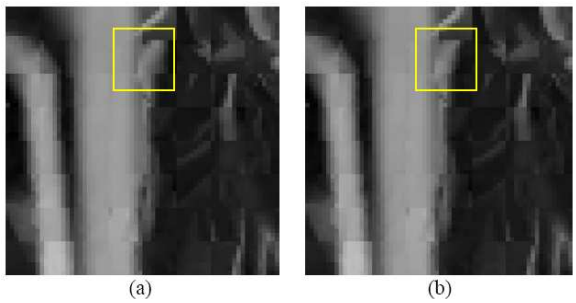

Figure 8. Close-up of retrieved image

VI. FAST FRACTAL IMAGE COMPRESSION WITH SSIM

The workflow of the fast fractal image encode is depicted in terms of block diagram as Figure 9. As shown in Figure 9, the fast fractal image encode scheme are divided into two steps. First, the blocks of domain and range image are classified use the edge-type of image blocks property and compare the class indexes to remove the redundant calculations. At last, the fractal image can be encoded by the fractal image compress algorithm using visual-based structure similarity index.

In order to improve the traditional fractal image compression coding in the problem of long time, with a similar structure (Structure Similarity, SSIM) indicators of fast fractal coding algorithms base on block property classifier have been proposed.

The structure similarity is utilized to reduce the computed complexity. SSIM index can accelerate the speed of classification and keep the image quality. The fractal

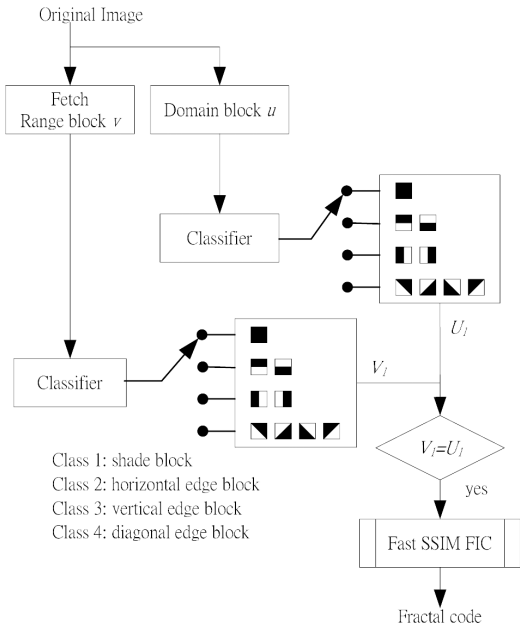

Figure 9. The Diagram of Fast Fratal Image Encode

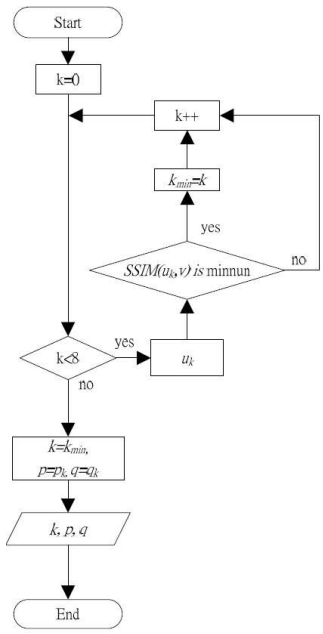

Figure 10. Fast Fractal Image Compression Encode using SSIM

image encode scheme using SSIM is faster and higher quality than using MSE.

Therefore, the SSIM index has replaced the MSE to assessment range block and the similarity between the domain block. Because of similar level indicators are designed with human visual system and suitable for measuring the visual structure of information. Because the conduct SSIM estimate, already contains luminance, contract of images. Therefore, modify full search fractal coding flowchart as Figure 10, the fast algorithm will preprocess use the block property classifier scheme and do not assessment p, q and u.The diagram of fast fractal image compression encode using SSIM is given in Figure 10.

VII. Module Description of SVM-base Fast Fractal Image Compression System

The proposed structure of the SVM-based fast fractal image compression system is depicted in Figure 11. The SVM-based fast fractal image compression system consists of three modules: Feature Extraction Module, Classifier Module and Fractal Image Compress Module. These modules will be discussed in the following sections.

A. Feature Extraction Module

let f be a given $N \times N$ gray level image. The domain pool 'D' is defined as the set of all possible blocks of size 16×16 of the image f, which makes up $(N - 16 + 1) \times (N - 16 + 1)$ blocks. The range pool 'R' is defined to be the set of all non-overlapping blocks of size 8×8, which makes up $(N/8) \times (N/8)$ blocks. For each block v from the range pool, the fractal transformation is constructed by searching all of the elements in the domain pool to find the most similar block. Let u denote a sub-sampled domain block which is of the same size as v. The features that act as the input values of SVM can be obtained as the following:

$$x = (x_1, \ldots, x_n) = (u, v, u - v) \tag{23}$$

where $n = 192$.

B. Classifier Module

The features obtained from the feature extraction module will be forwarded to the classifier module that employs the SVM as the classifier mechanism. Due to the characteristic of SVM, the classifying ability is confined so that the SVM classification mechanism was designed in a 2-stage fashion as illustrated in Figure 12. The classification algorithm will be employed twice indicated as similar and SVM Sub-modules. During the training phases for the classification mechanism, the edge oriented similar samples will be organized in one group . The similar classify sub-module will be classify first based on these samples. After completing the classifing of phases I for the similar classify, the module will be capable of recognizing the edge oriented similar samples. On the other hand, the samples, that pass first module, will be forwarded to the SVM sub-module for training phase I. Similarly, the Similar and SVM will be able to separate the edge oriented similar and SSIM maximum samples. The output value for a given input value of SVM is defined as the following: For SVM,

$$y = \begin{cases} 1, & if\, ssim(u, v) > T \\ 0, & otherwise. \end{cases}$$

where T is the threshold for the selection criteria of the searching procedure. Thus, the non-trivial training set is defined as is given in (2).

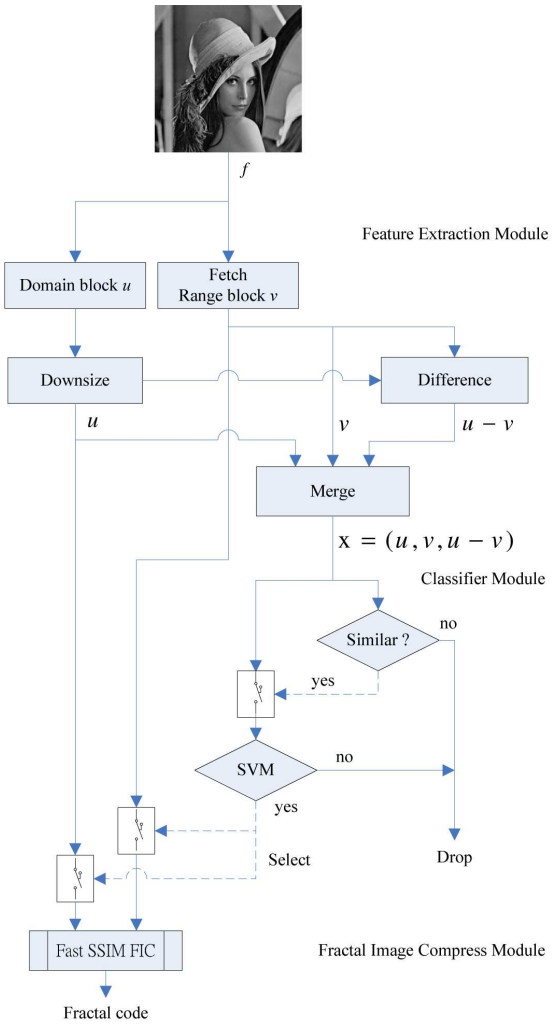

Figure 11. The Diagram of SVM Base Fast Fratal Image Encode

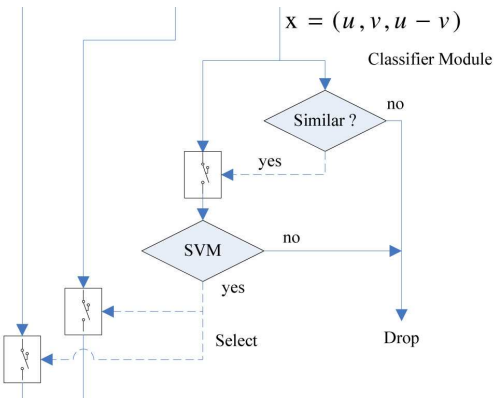

Figure 12. 2-stage Module

C. Fractal Image Compress Module

Fractal Image Compress Module with a similar structure (Structure Similarity, SSIM) indicators of fast fractal coding algorithms base on block property classifier have been proposed.

The structure similarity is utilized to reduce the computed complexity. SSIM index can accelerate the speed of classification and keep the image quality.

Therefore, the SSIM index has replaced the MSE to assessment range block and the similarity between the domain block. Because of similar level indicators are designed with human visual system and Suitable for measuring the visual structure of information. Because the conduct SSIM estimate, already contains luminance, contract of images. Therefore, modify full search fractal coding flowchart as Figure 10, the fast algorithm will preprocess use the block property classifier scheme and do not assessment p, q and u.The diagram of fast fractal image compression encode using SSIM is given in Figure 10.

VIII. Experimental Results and Evaluation

The proposed visual-based SSIM for fractal image compress algorithm using edge property is simulated and verified. The images Lena, Baboon are tested to demonstrate the improvements on the acceleration rate, and image quality of the proposed algorithm in comparison to the baseline method. For a given image of size 256×256, the coding size for fractal coder is 8×8. The software simulation implemented in C++ is performed on a Core 2 Duo, Windows XP personal computer.

To verify the detection capability of the system, 6 samples are collected, respectively. In order to fairly sample, the research method of cross validation is utilized. Each type of samples is split evenly into four groups. The first 3 groups are selected as training set and the fourth group as the testing set. The pattern to be forwarded through the SVM classification scheme is followed but each time different group is used as testing set while the other three are training sets.

The speedup ratio is defined as the ratio of the encoding time of full search scheme over that of scheme under consideration. The distortion between the original image and the retrieved image is measured in PSNR.

Table II. demonstrates the performance of proposed scheme and full search method with different image quality index. The fractal image encode scheme using SSIM is faster and higher quality than using MSE. The results of the proposed approach is 15 times faster than baseline method while there is only 0.69 dB decay.

IX. Conclusion

In this paper, the Structure Similarity and and block property classifier employed for the fractal image compression is investigated. Experimental results show that the visual effect is better and the encoding speed is 15 times faster than that of the full search. The SVM learning scheme is proposed to implement the fractal image compress system. The advantage of the SVM learning mechanism is that it provides less complexity as well as more adaptive structure and is more suitable for implementing on-line systems. Experimental results have demonstrated the functionality and the superiority of the 2-stage SVM classification scheme in comparison to the traditional approaches.

TABLE II.
PERFORMANCE OF PROPOSED SCHEME AND FULL SEARCH METHOD

Lena	Full Search 1	Full Search 2	Fast Search 1	Fast Search 2	Propose Scheme
PSNR	28.91	28.93	28.60	28.59	28.02
SSIM	0.984	0.984	0.983	0.982	0.972
Criteria	MSE	SSIM	Fast SSIM	Fast SSIM and Classifier	SVM and SSIM
Speed Up	1	0.85	2.52	10.01	15.12
Baboon	Full Search 1	Full Search 2	Fast Search 1	Fast Search 2	Propose Scheme
PSNR	20.15	20.15	20.00	19.99	20.01
SSIM	0.840	0.840	0.834	0.835	0.833
Criteria	MSE	SSIM	Fast SSIM	Fast SSIM and Classifier	SVM and SSIM
Speed Up	1	0.85	2.54	10.12	14.92
F16	Full Search 1	Full Search 2	Fast Search 1	Fast Search 2	Propose Scheme
PSNR	24.87	24.55	24.09	23.99	24.01
SSIM	0.890	0.891	0.864	0.885	0.873
Criteria	MSE	SSIM	Fast SSIM	Fast SSIM and Classifier	SVM and SSIM
Speed Up	1	0.85	2.53	10.32	15.12
Pepper	Full Search 1	Full Search 2	Fast Search 1	Fast Search 2	Propose Scheme
PSNR	28.86	28.79	28.82	28.77	27.98
SSIM	0.941	0.940	0.934	0.935	0.933
Criteria	MSE	SSIM	Fast SSIM	Fast SSIM and Classifier	SVM and SSIM
Speed Up	1	0.83	2.24	10.12	15.32

ACKNOWLEDGMENT

This work is supported by National Science Council of Taiwan grants NSC 97-2218-E158-001, NSC 97-2815-C-158-002-E.

REFERENCES

[1] M. F. Barnsley and S. Demko, "Iterated function systems and the global construction of factals," *in Proc Roy. Soc. Lond. A*, vol. A399, pp. 243–275, 1985.

[2] M. F. Barnsle, *Fractal Everywhere*. New York: New York: Academic, 1988.

[3] M. F. Barnsley, J. H. Elton, and D. P. Hardin, "Recurrent iterated function systems," *In Constructive Approximation*, pp. 3–31, 1989.

[4] A. E. Jacquin, "Image coding based on a fractal theory of iterated contractive image transformations," *IEEE Transaction on Images Processing*, vol. 1, pp. 18–30, 1992.

[5] Y. Fisher, *Fractal Image Compression in Theory and Application*. New York: Springer-Verlag, 1994.

[6] Z. Wang, D. Zhang, and Y. Yu, "Hybrid image coding based on partial fractal mapping," *Signal Processing: Image communication*, vol. 15, pp. 767–779, 2000.

[7] T. K. Truong, J. H. Jeng, I. S. Reed, P. C. Lee, and A. Li, "A fast encoding algorithm for fractal image compression using the dct inner poduct," *IEEE Transaction on Images Processing*, vol. 9, no. 4, pp. 529–535, 2000.

[8] T. K. Truong, C. M. Kung, J. H. Jeng, and M. L. Hsieh, "Fast fractal image compression using spatial correlation," *Chaos Solitons Fractals*, vol. 22, no. 5, pp. 1071–1076, 2004.

[9] Z. Wang, A. Bovik, H. Sheikh, and E. Simoncelli, "Image quality assessment: From error visibility to structural similarity," *IEEE Transactions on Image Processing*, vol. 13, no. 4, pp. 600–612, April 2004.

[10] C. M. Kung, Y. J. Wang, J. H. Jeng, C. H. Kung, and T. K. Truong, "Vision system motion tracking control with high performance motion estimation," *IEEE Instrumentation and Measurement Technology Conference*, pp. 1017–1021, May 2002.

[11] C. M. Kung, P. L. Lee, and J. H. Jeng, "Fast fractal image compression using visual-based structure similarty index," *The 21th IPPR Conference on Computer Vision, Graphics, and Image Processing*, August 2008.

[12] Y. D. Cai, X. J. Lin, X. B. Xu, and K. C. Chou, "Prediction of protein structural classed by support vector machines," *Computers and Chemistry*, vol. 26, pp. 293–296, 2002.

[13] C. W. Moris, A. Autet, and L. Boddy, "Support vector machines for identifying organisms - a comparison with strongly partitioned radial basis function networks," *Ecological Modeling*, vol. 146, pp. 57–67, 2001.

[14] F. E. H. Tay and L. Cao, "Application of support vector machines in financial time series forecasting," *Omega*, vol. 29, pp. 309–317, 2001.

[15] V. Vapnik, *Statistical leaning theory*. New-York: John Wiley, 1998.

[16] N. Cristianini and J. Shawe-Taylor, *An Introduction to Support Vector Machines*. Cambridge University Press, 2000.

[17] Z. Wang and A. C. Bovik, "A universal image quality index," *IEEE Signal Processing Letters*, vol. 9, no. 3, pp. 81–84, March 2002.

C. M. Kung was born in Tainan, Taiwan, ROC. He received the B.S. degree in electronic engineering from Fu Jen Catholic University, Taiwan, R.O.C., in 1991, the M.B.A degree in business and operations management from Chang Jung Christian University, Taiwan, R.O.C., in 1999, and the Ph.D. degree in electrical engineering from the I-Shou University, Taiwan, R. O. C., in 2006. He is currently an Assistant Professor at Department of Information Technology and Communication, Shih Chien University Kaohsiung Campus, Kaohsiung County, Taiwan, R.O.C. His research interests include watermarking, soft-computing, image compression, and error-correcting code.

S. T. Chao was born in Tainan, Taiwan, ROC. He received the B.S. and M.S. degree in information and computer engineering from Chung-Yuan Christian University, Taiwan, R. O. C. He is the Lecturer at Department of Engineering and Management of Advanced Technology, Chang Jung Christian University, Tainan County, Taiwan, R.O.C. His research interests include watermarking, image compression, channel router, and embedded system.